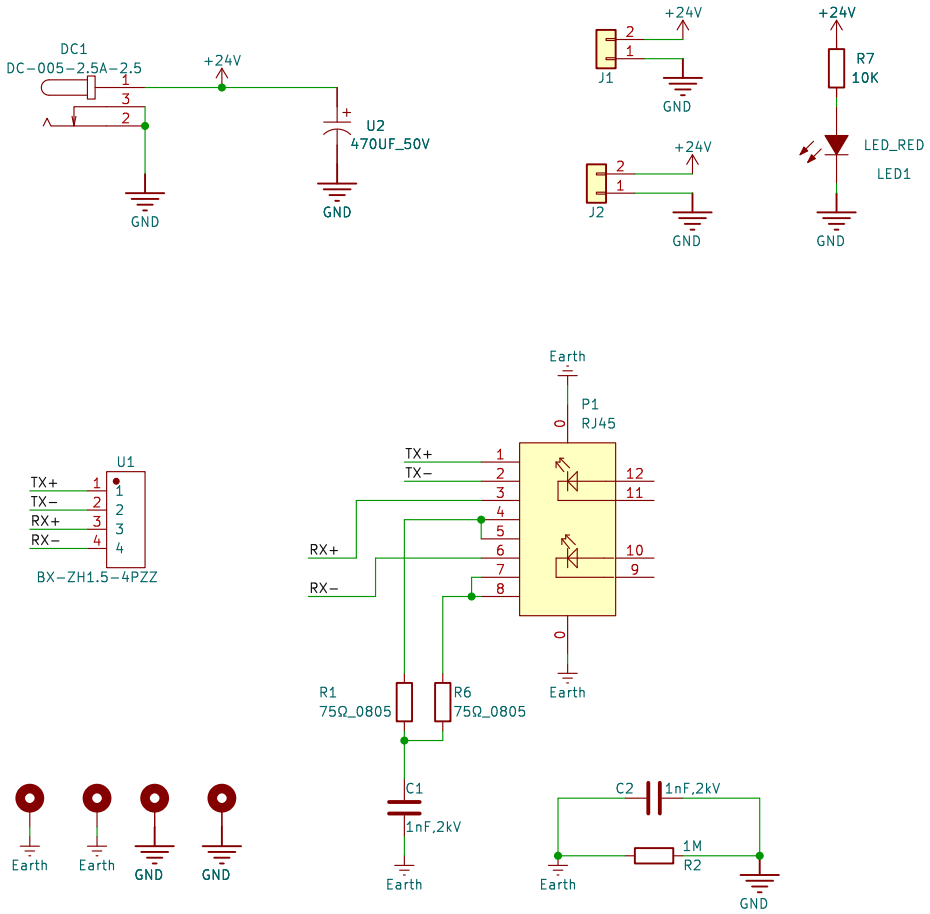

ECAT_Adapter board

HPMicro 先楫半导体

Sheet File:		
Title: ECAT_Adapter board		
Size: A4	Date:	Rev: A
KiCad E.D.A. kicad 7.0.9		Id: 1/1

A4